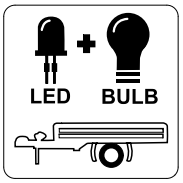

ERICH JAEGER

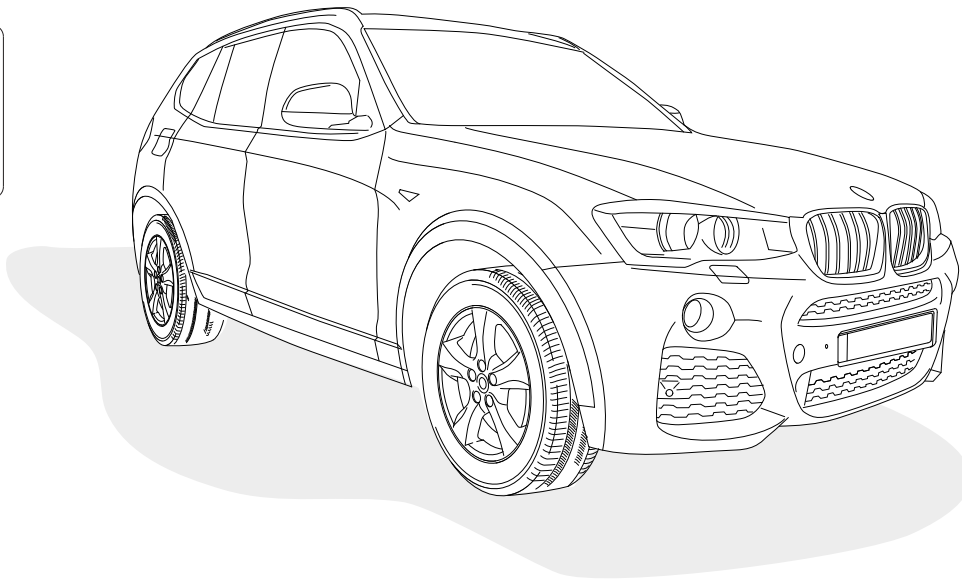

BMW X3 F25 11/10 >> 02/14

750018

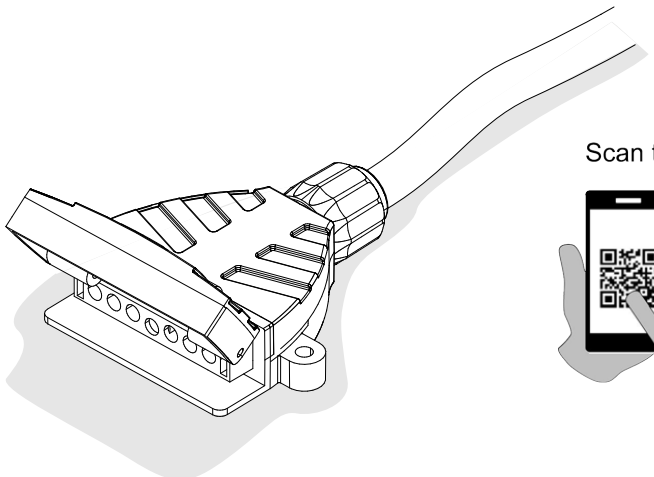

Scan this for our full E-Kit catalogue

Installation instructions

GB

Reference:

The following information must be reviewed before beginning the assembly:

The installation instructions are to be thoroughly read.
The installation should be carried out by qualified personnel with the relevant technical knowledge.
The vehicle manufacturers' current technical notices and information on retrofitting must be followed.
The removal and replacement instructions found in the current repair manuals must be followed.
It must be ensured that the vehicle is technically suitable for the installation of a trailer hitch.

KIT

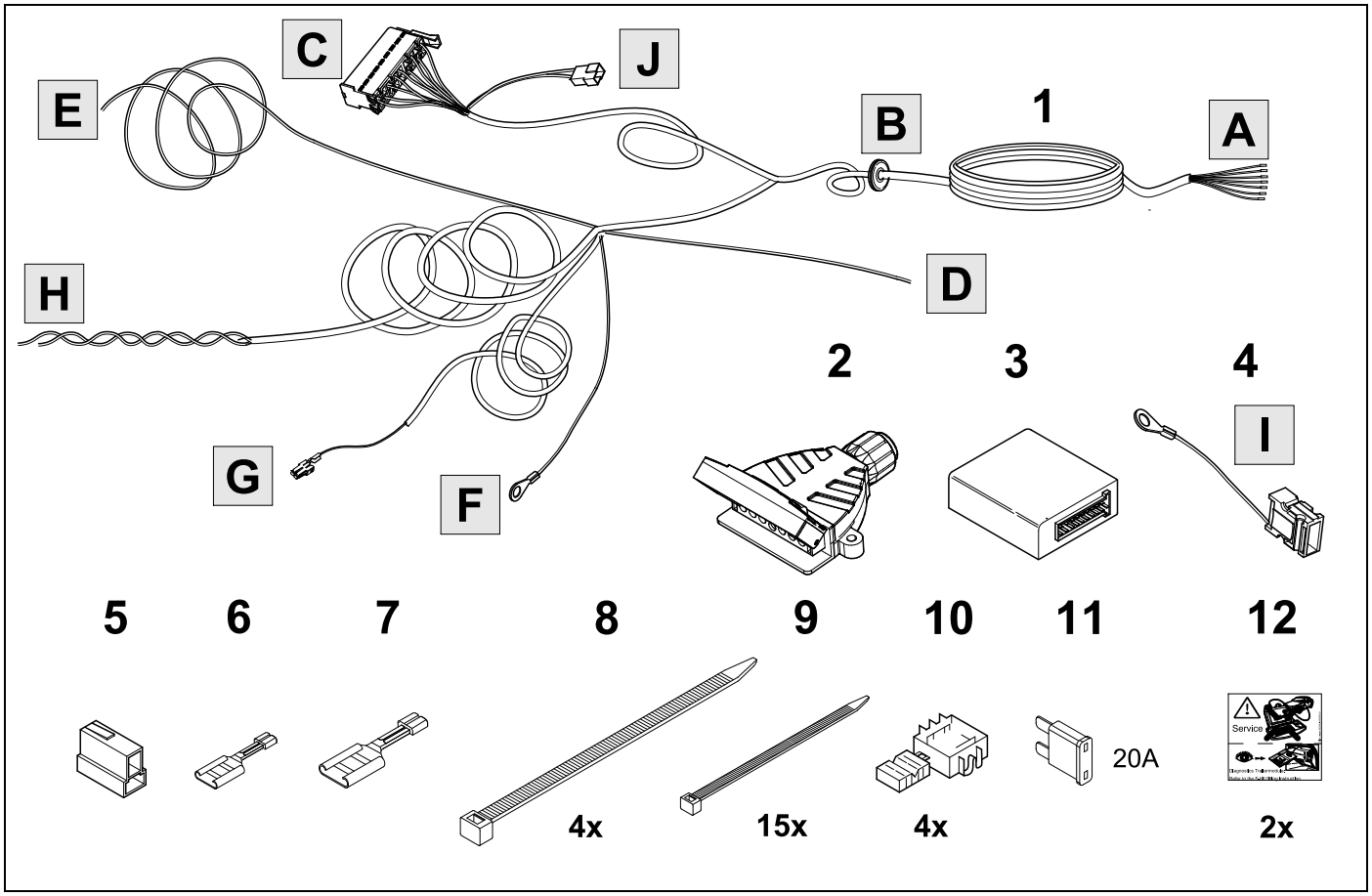
C
J
E
B
1
A
H
D
2
3
4
I
G
F
5
6
7
8
9
10
11
12
20A
Service
4x
15x
4x
2x

TOOLS

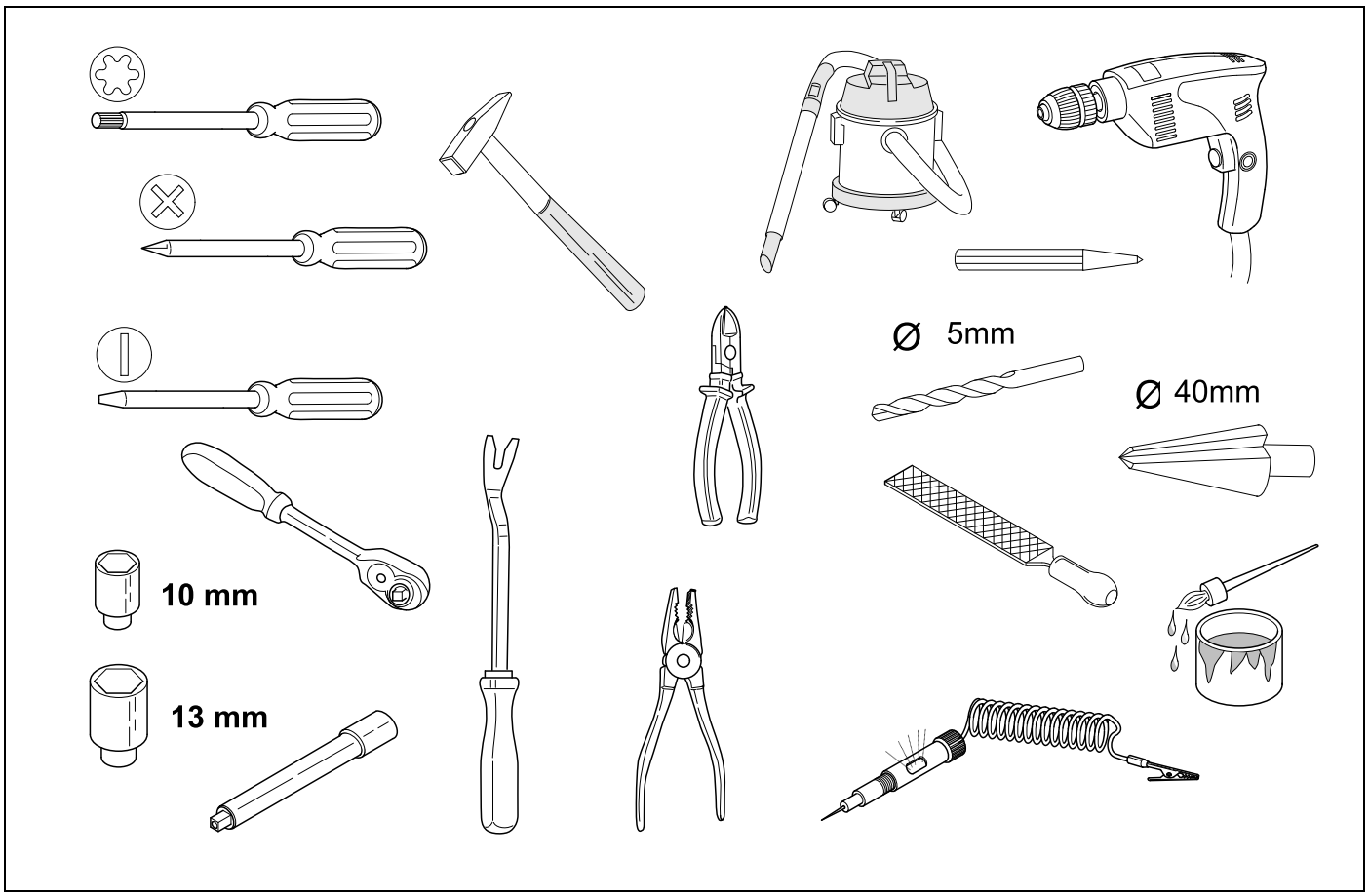
Ø 5mm
Ø 40mm
10 mm
13 mm

1

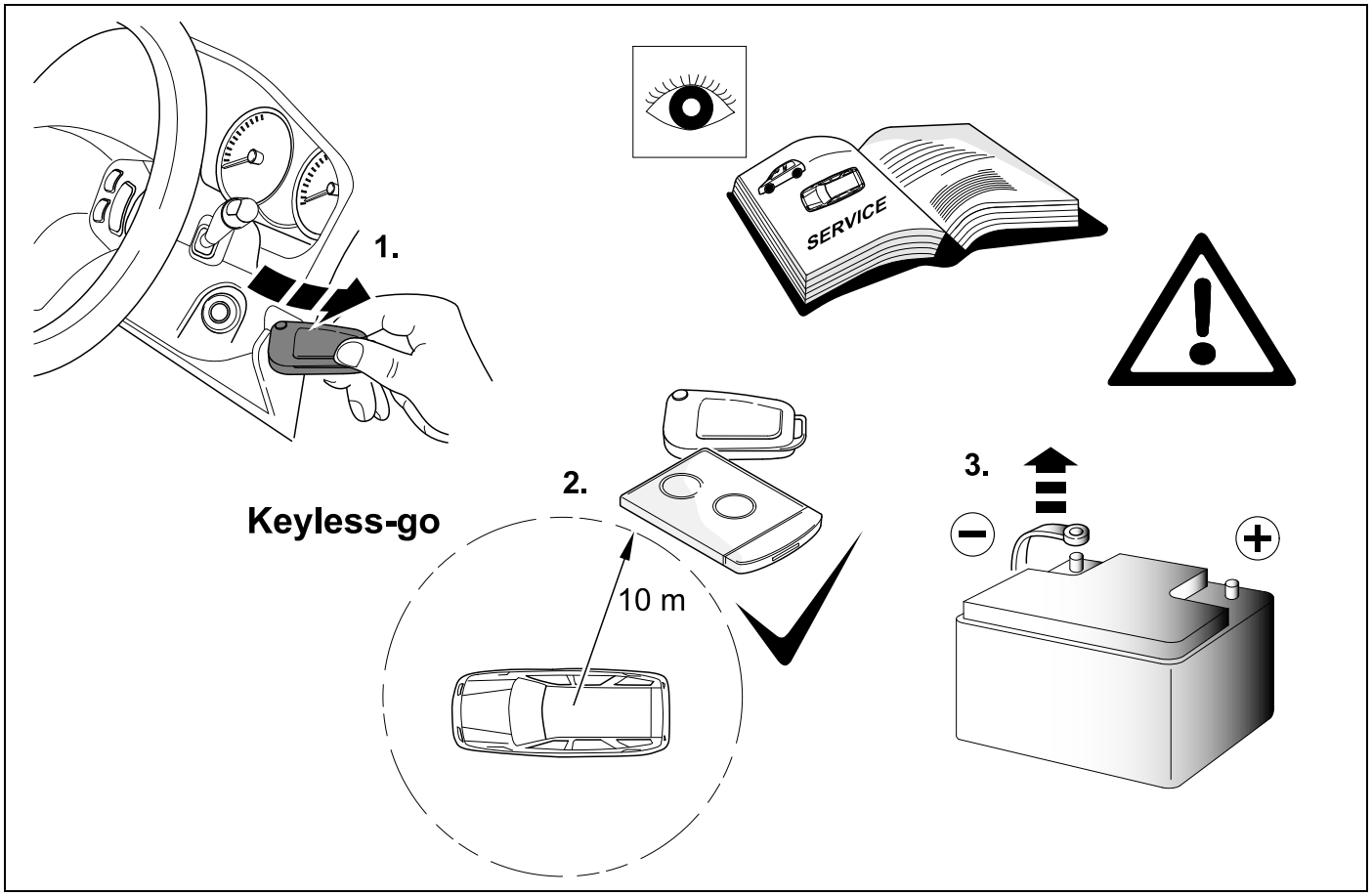

2 ROUTING

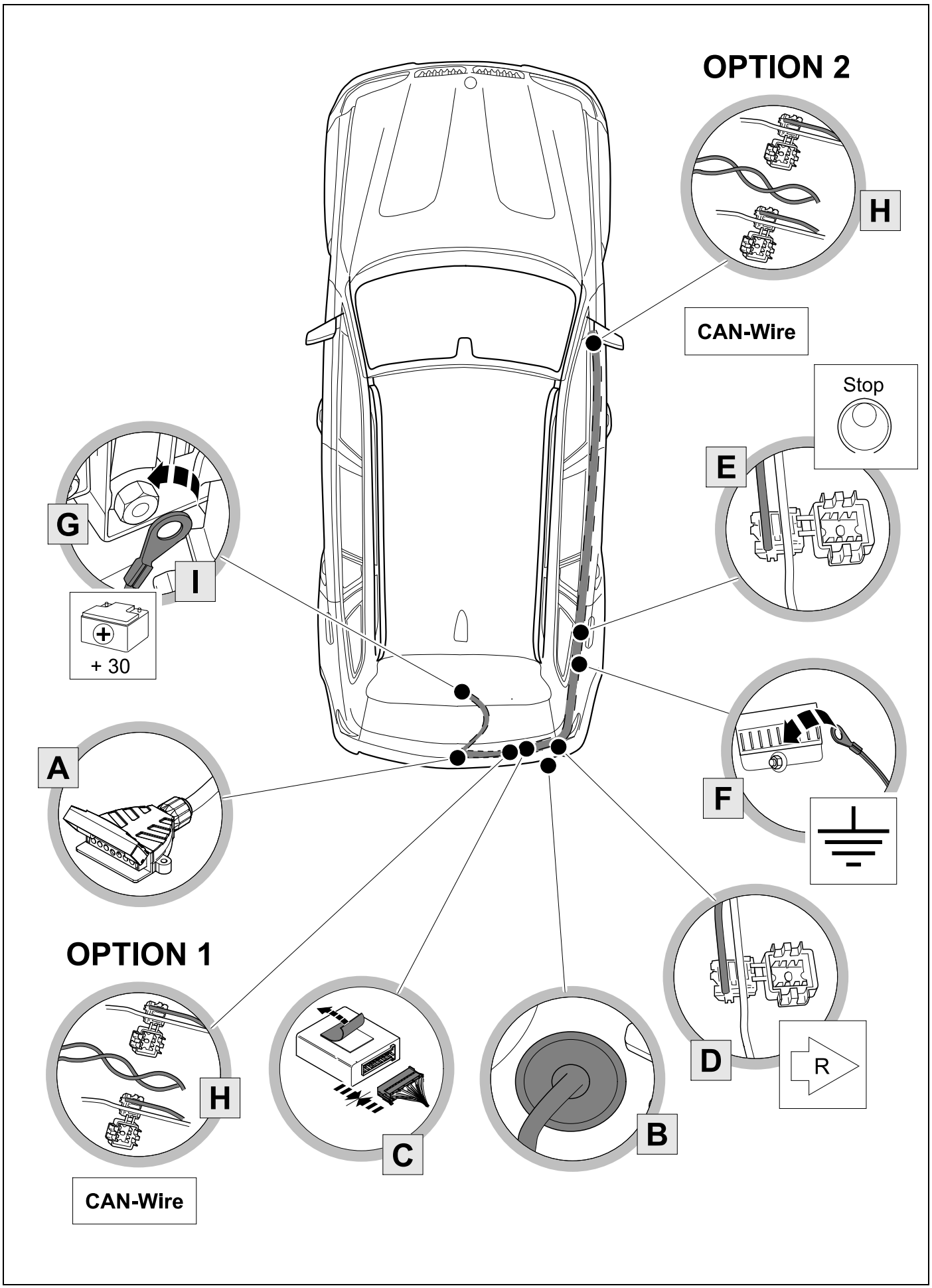

3 REMOVE

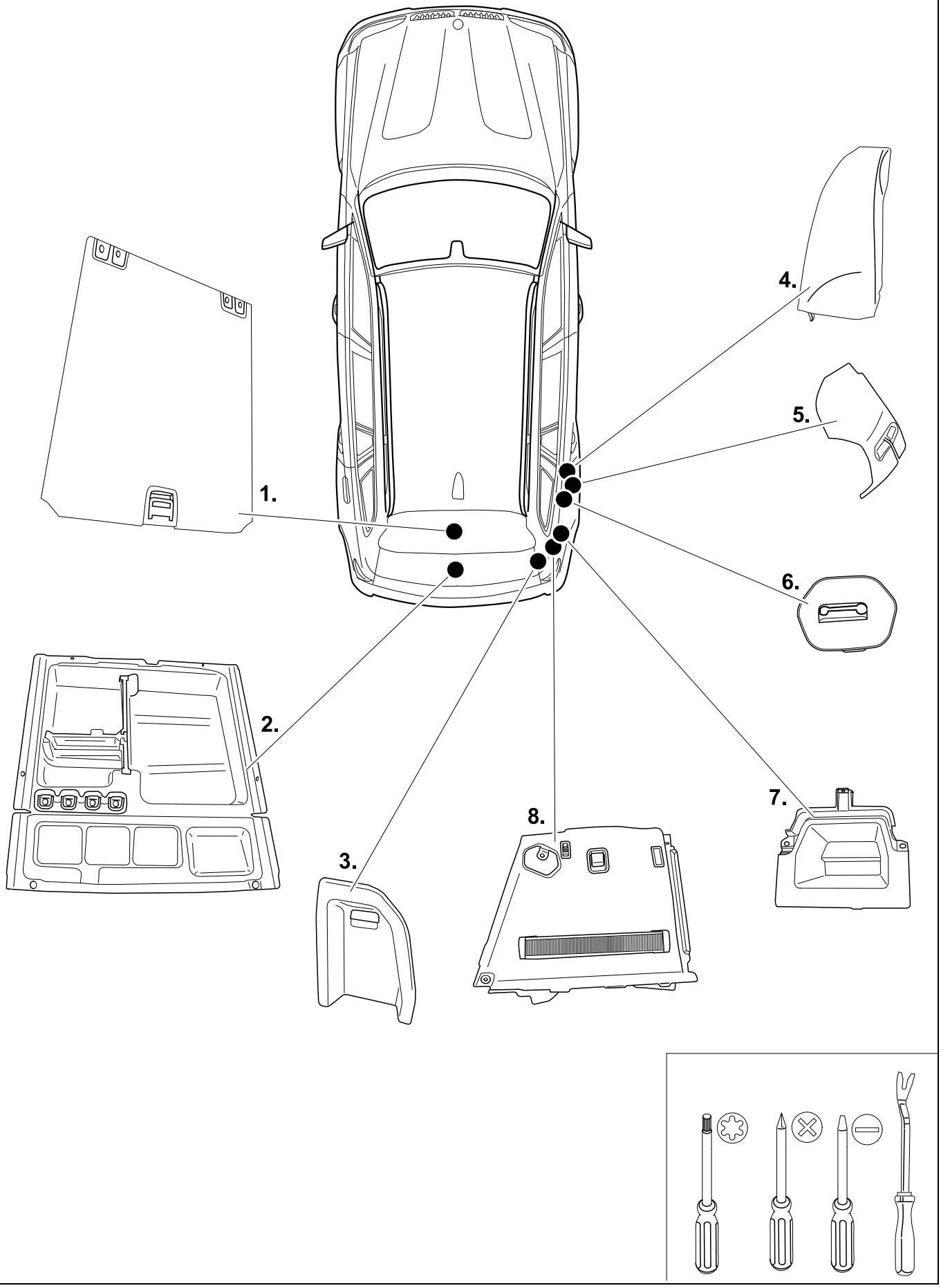

4

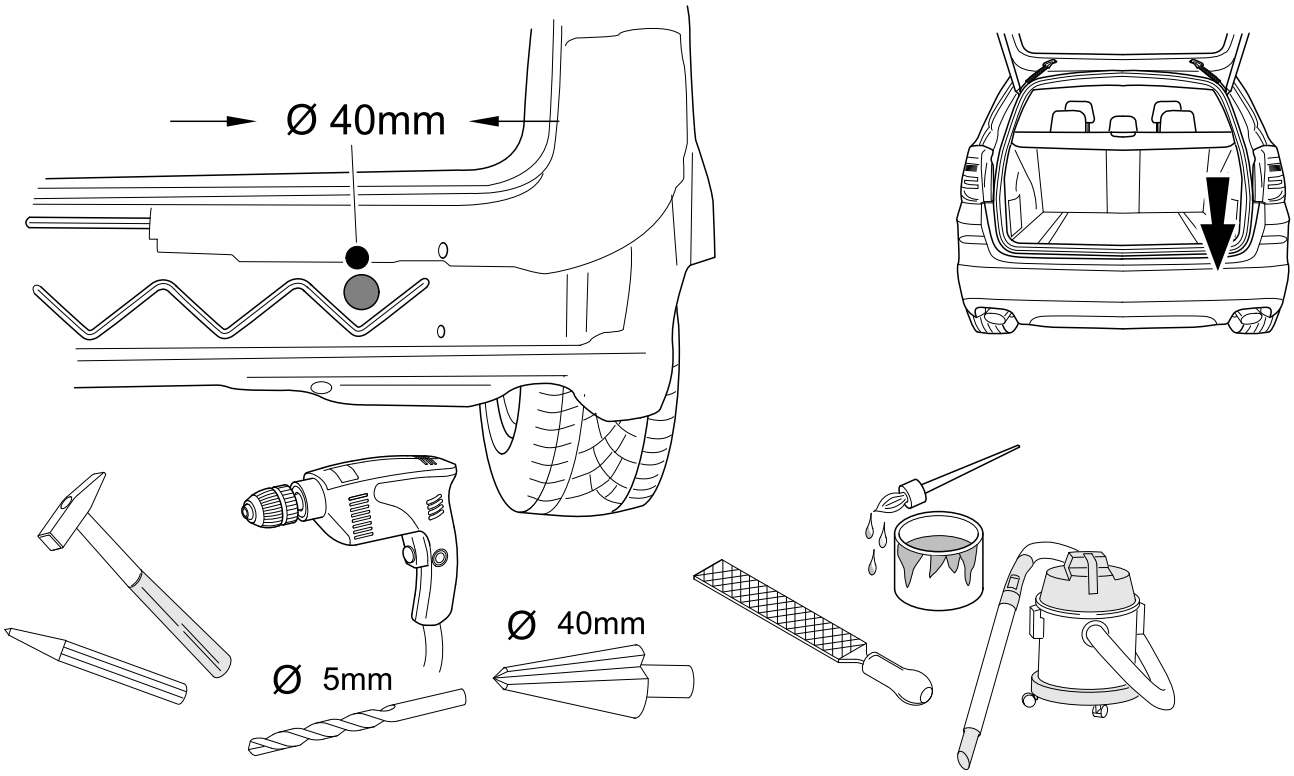

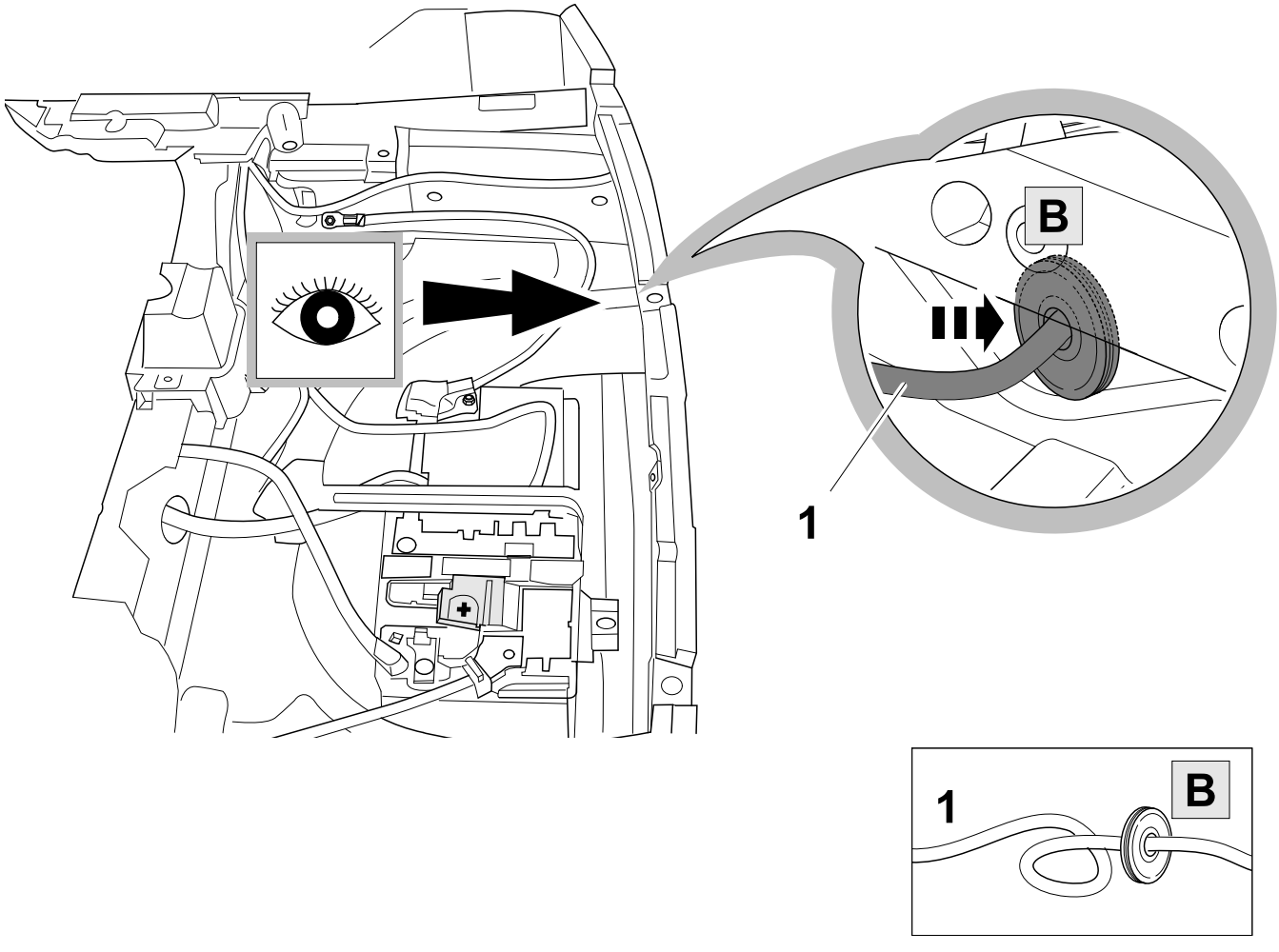

5

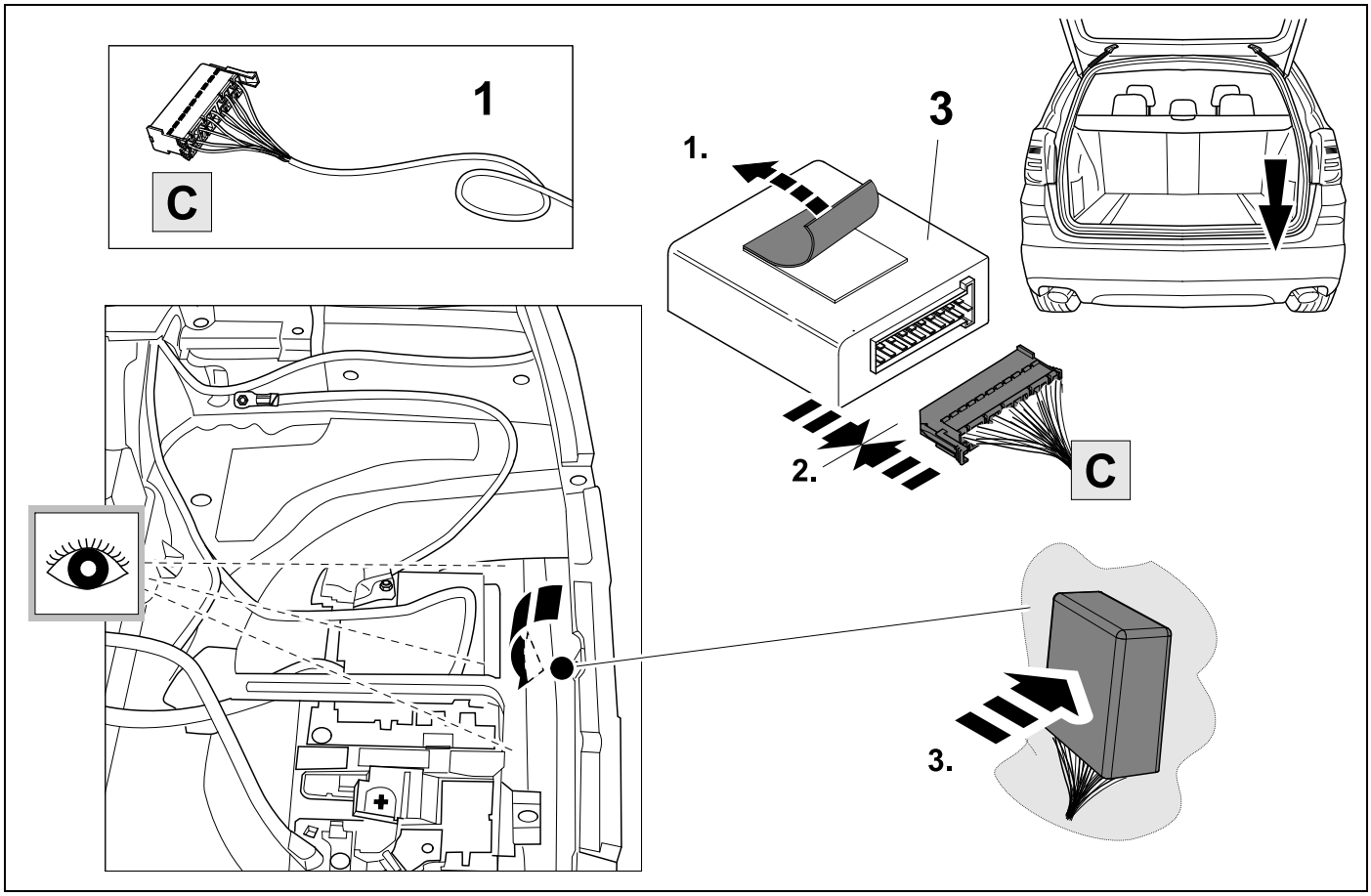

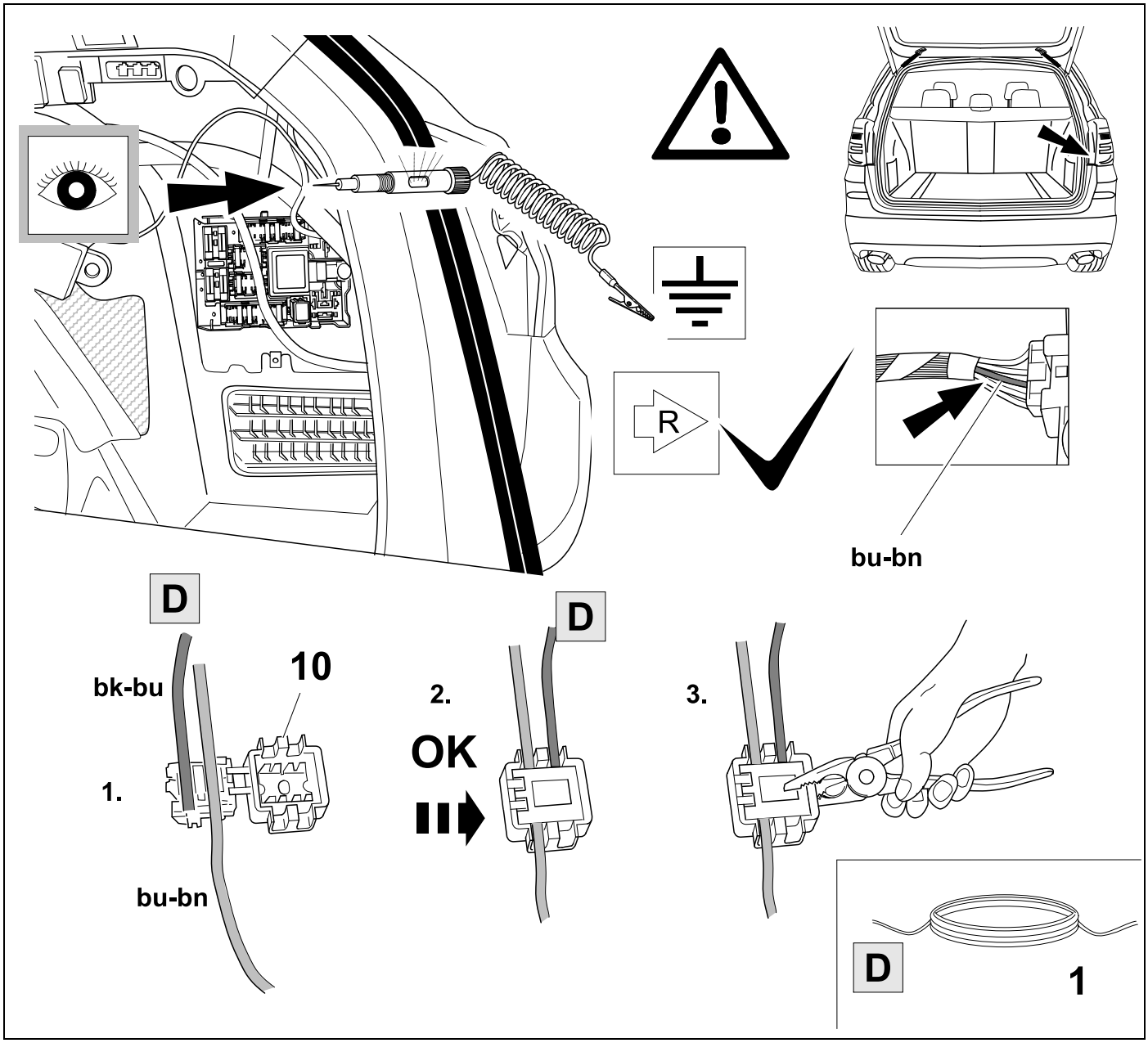
R
bu-bn
D
bk-bu
10
1.
bu-bn
2.
OK
D
3.
D
1

7 ⇨ **19**

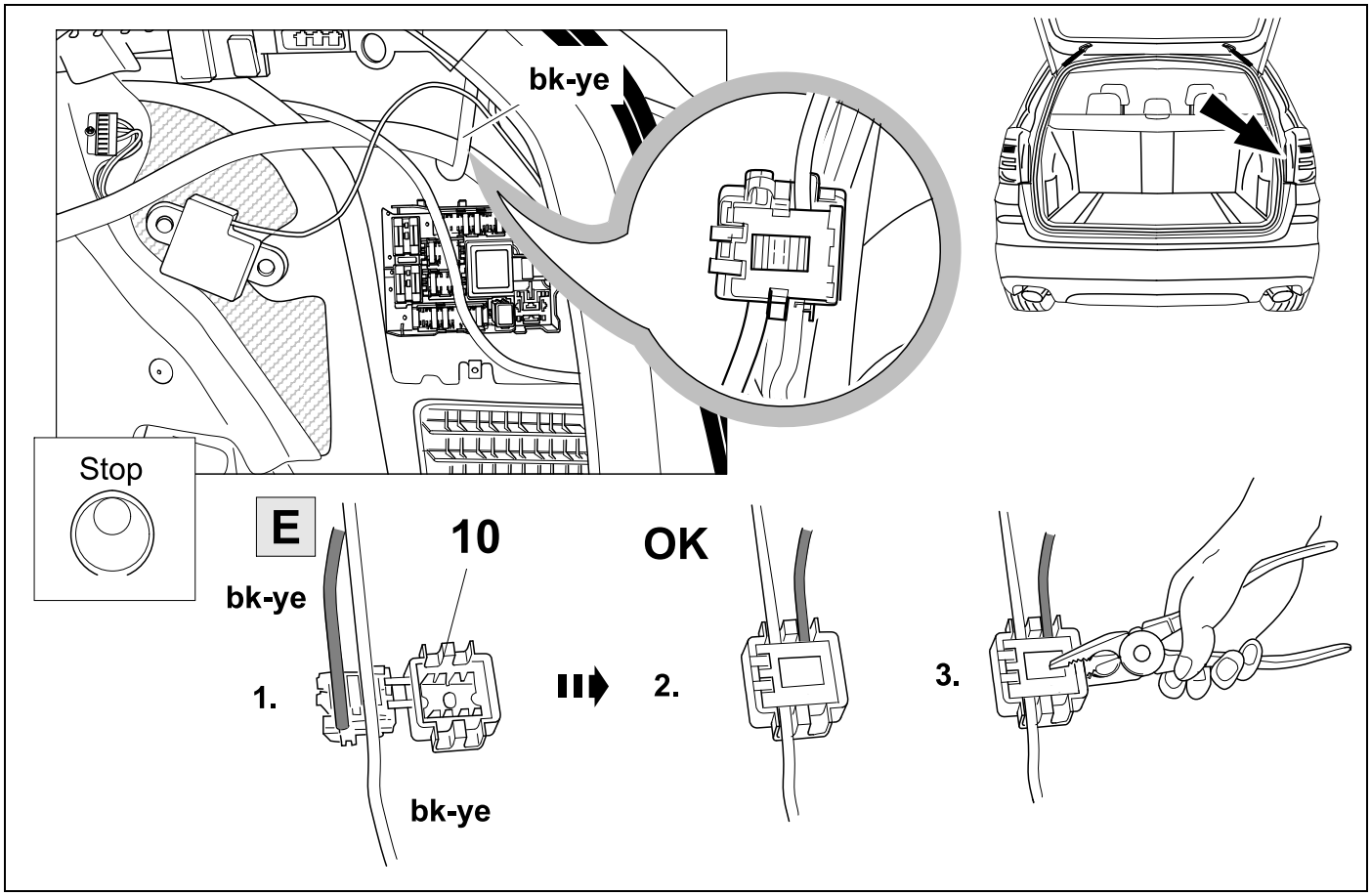

8

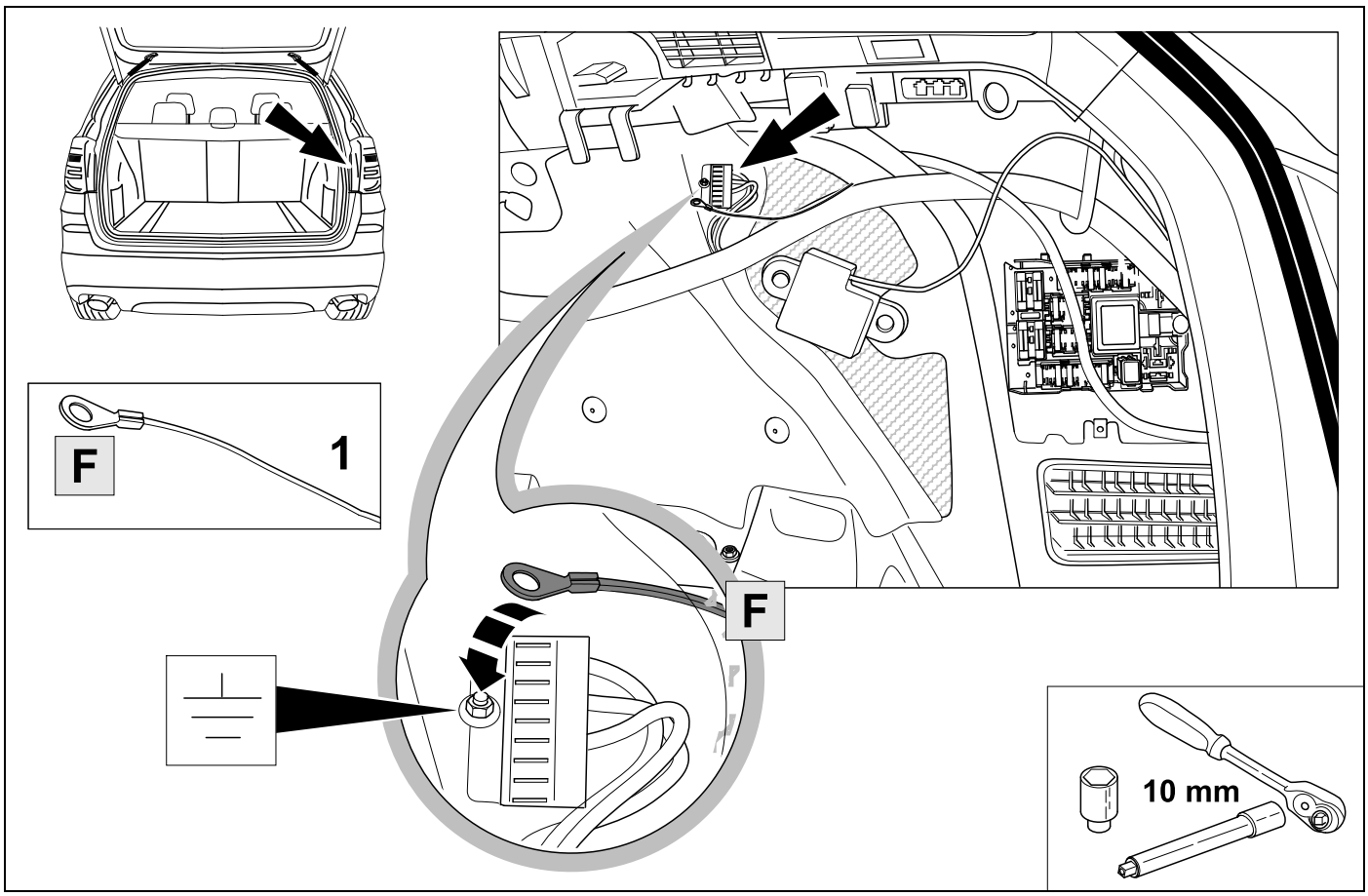

9 ⇨ **24**

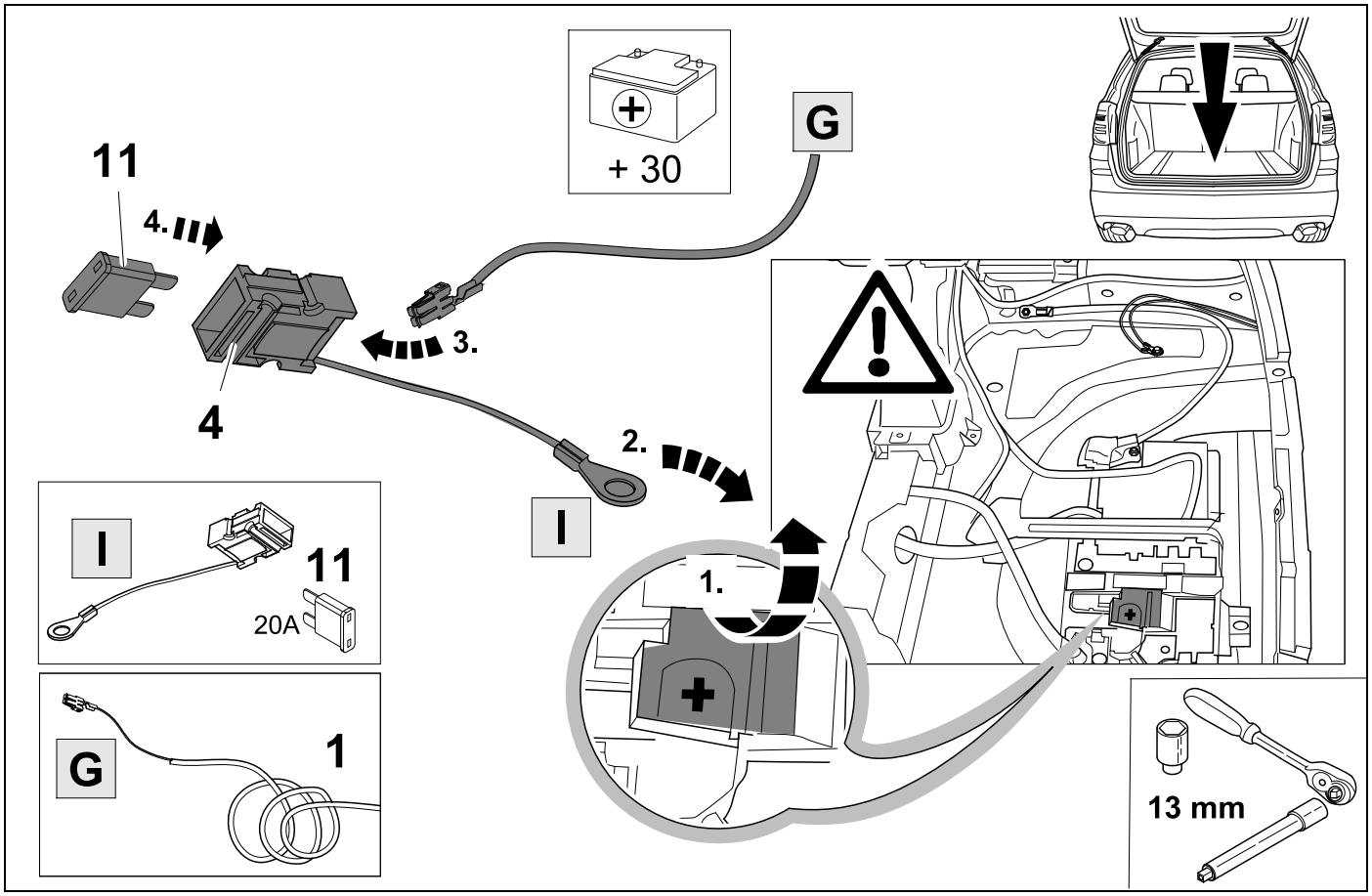
+ 30
G
11
4.
3.
4
2.
I
1.
I
11
20A
G
1
13 mm

10 ⇨ **19**

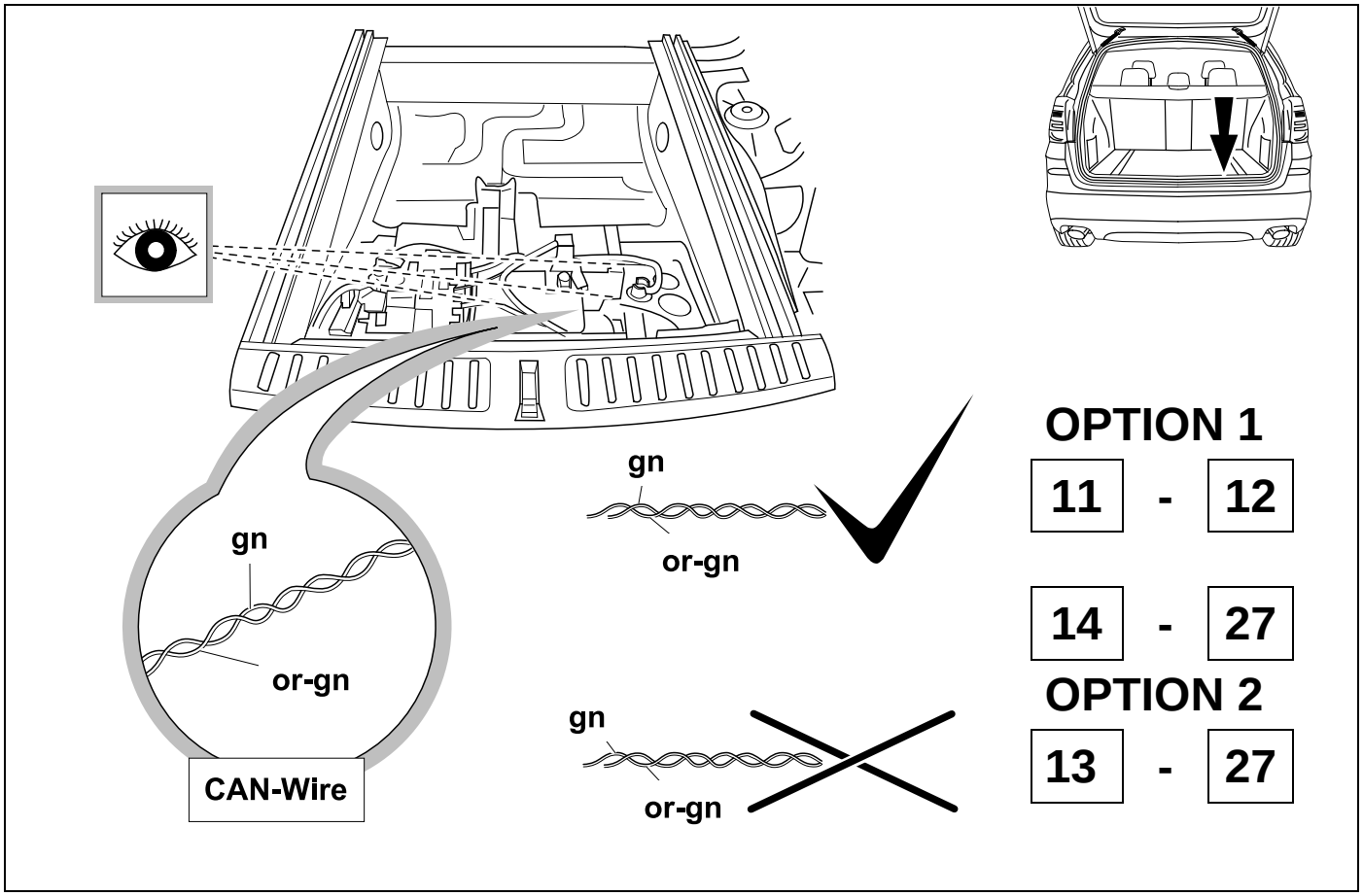
gn
or-gn
CAN-Wire
gn
or-gn
gn
or-gn
OPTION 1
11 - 12
14 - 27
OPTION 2
13 - 27

11 OPTION 1 ⇨ 19

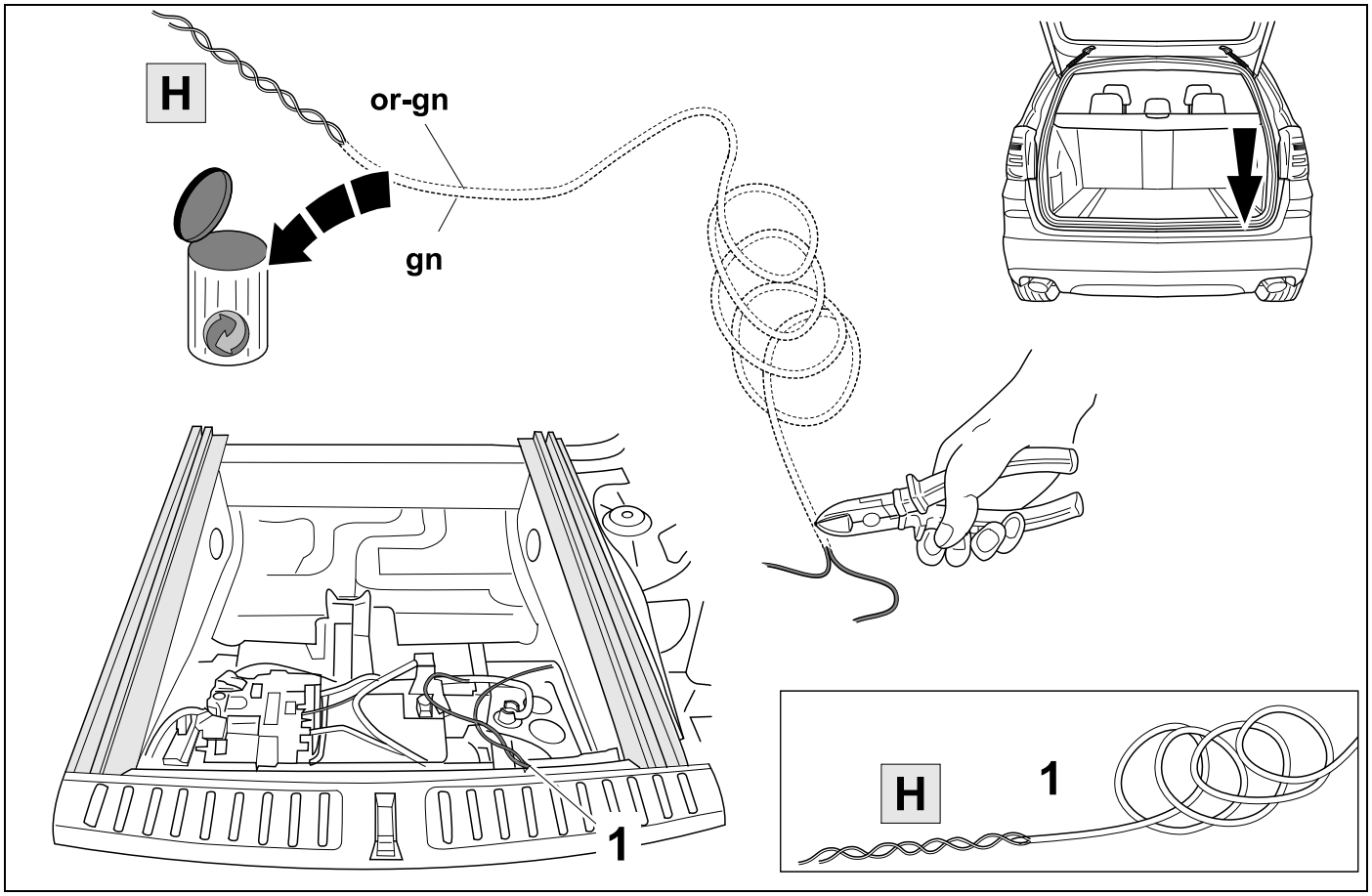

12 OPTION 1 ⇨ 19

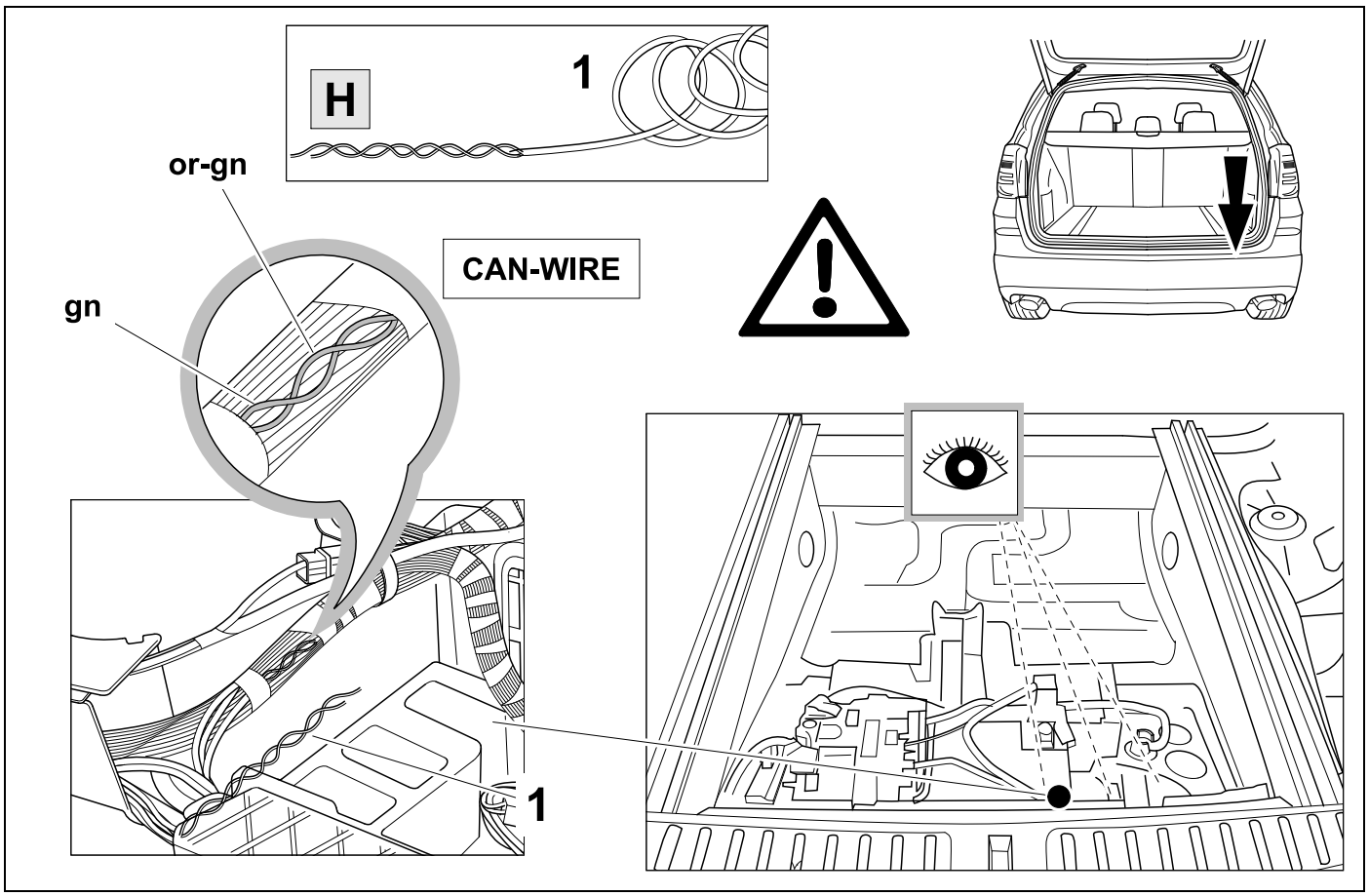

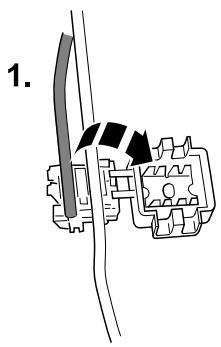
1.

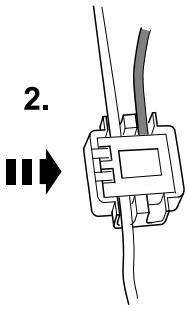
2.

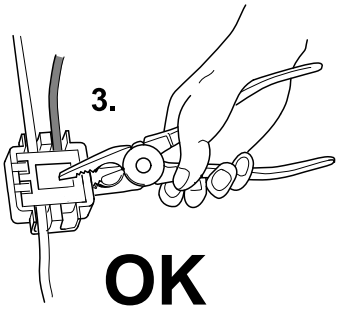
3.
OK

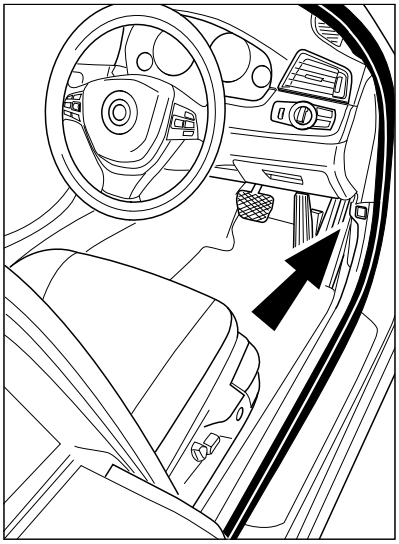

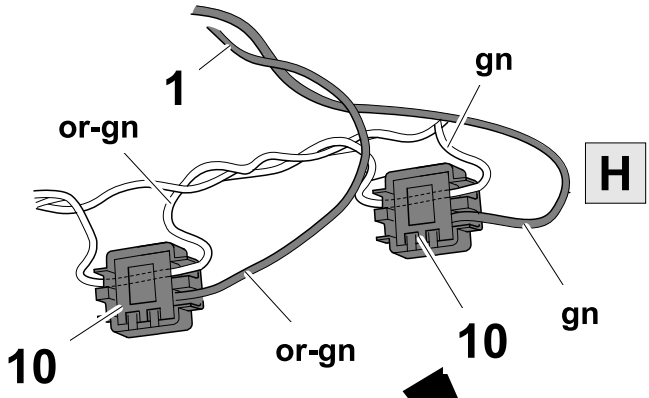
1
gn
or-gn
H
10
or-gn
10
gn

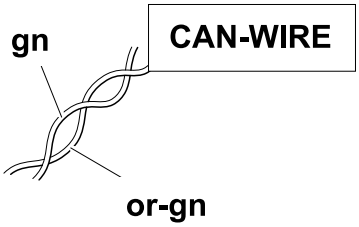
gn
CAN-WIRE
or-gn

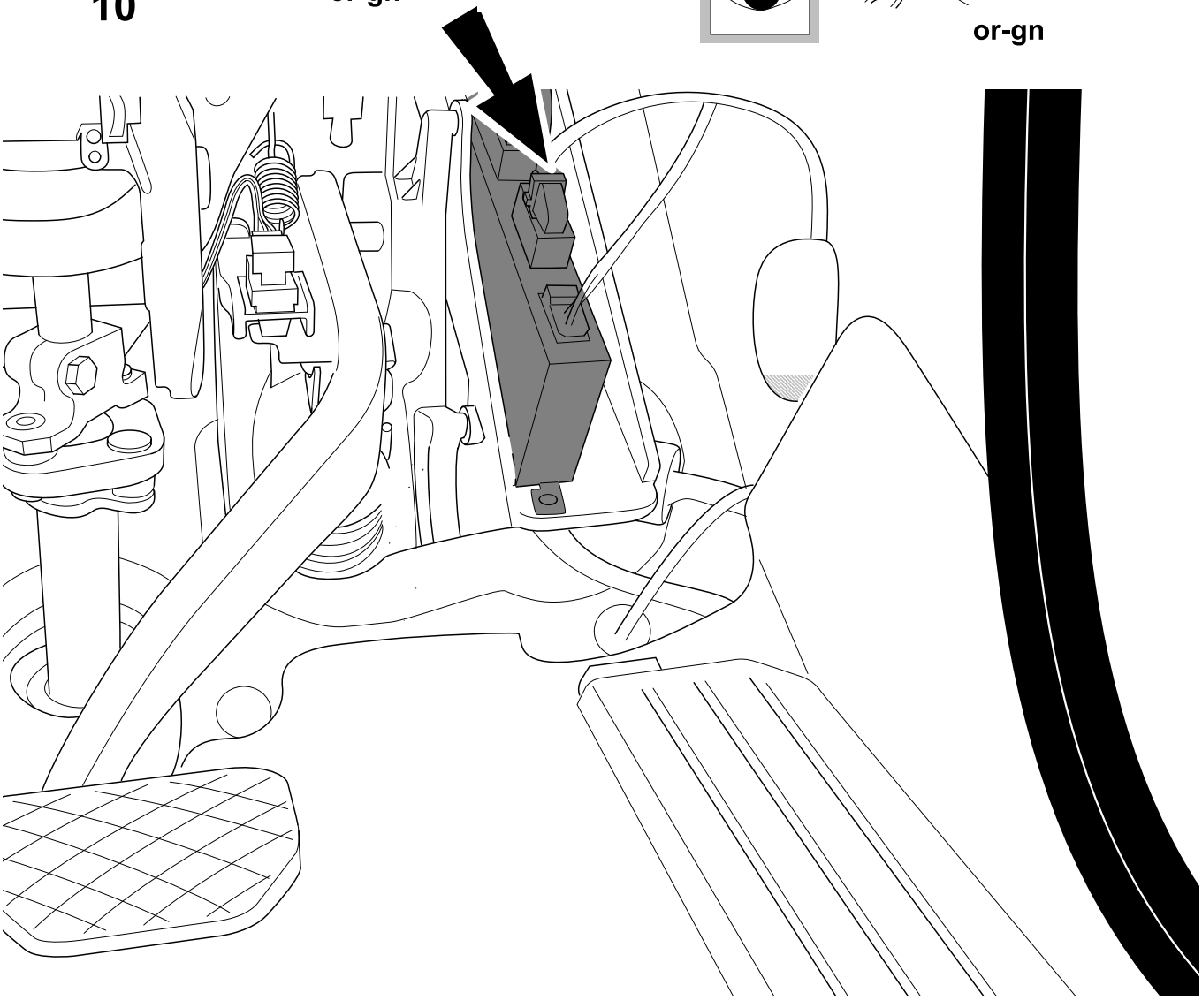

14

⇨ 19

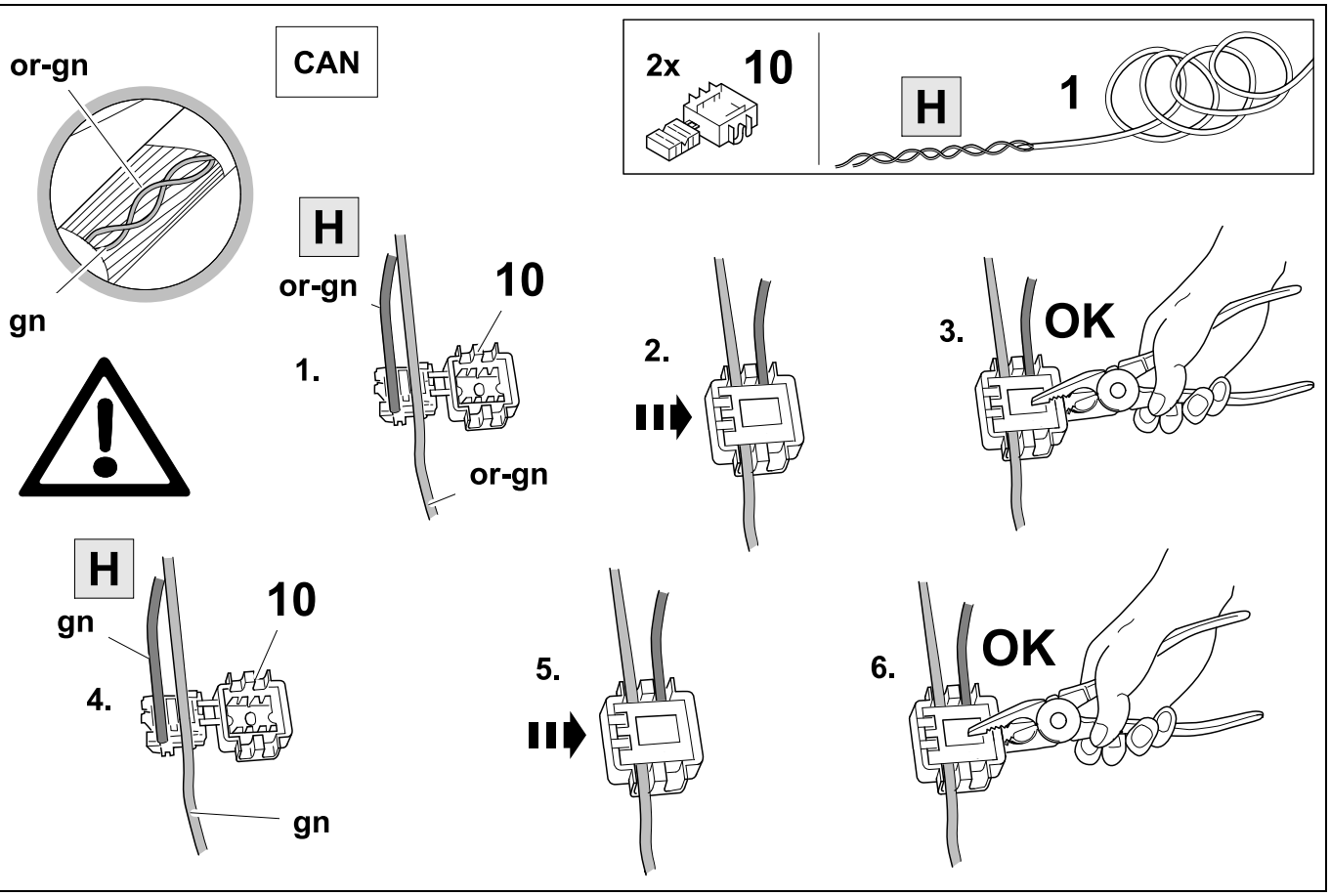

15

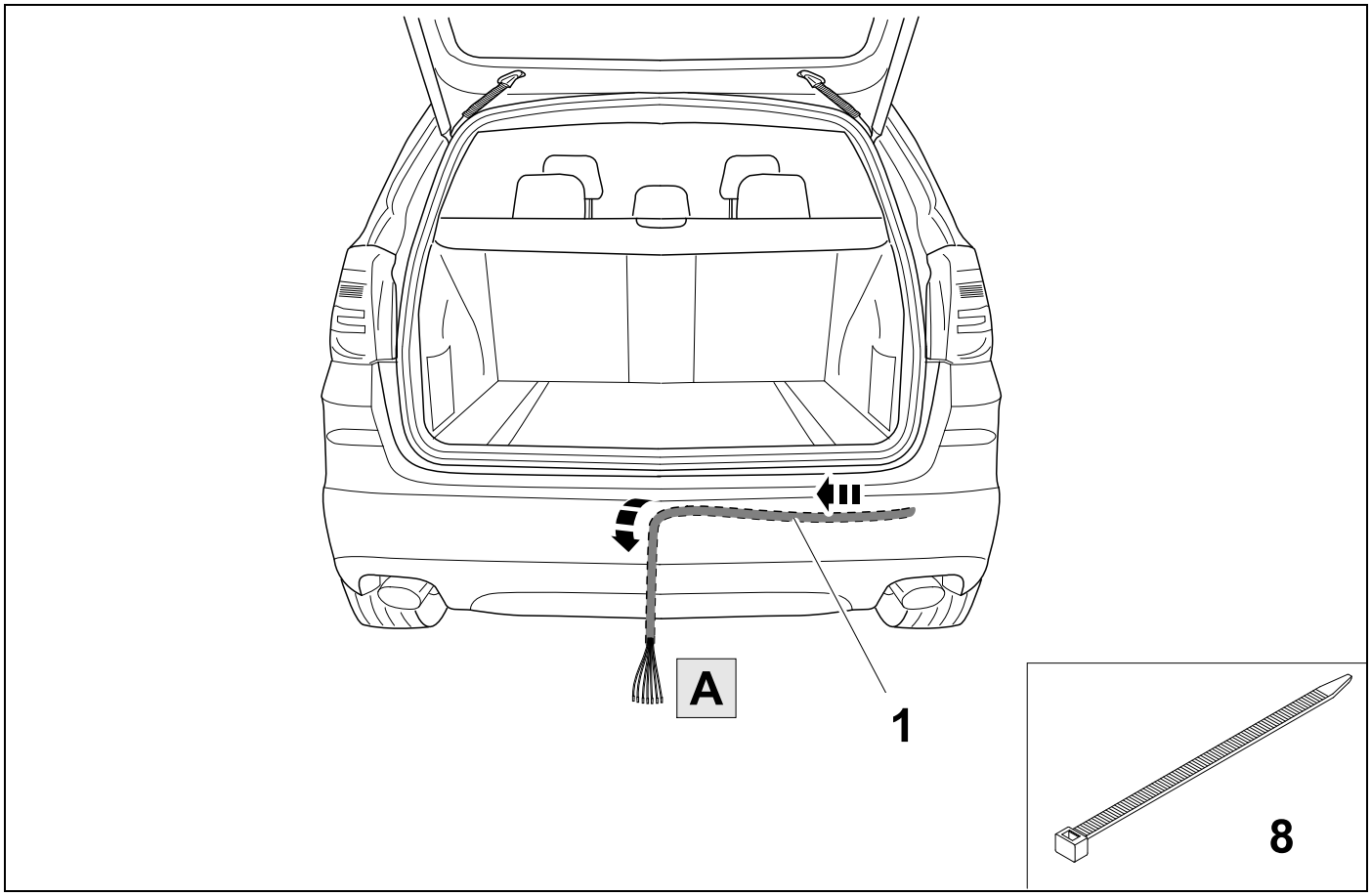

16 ⇨ **18**

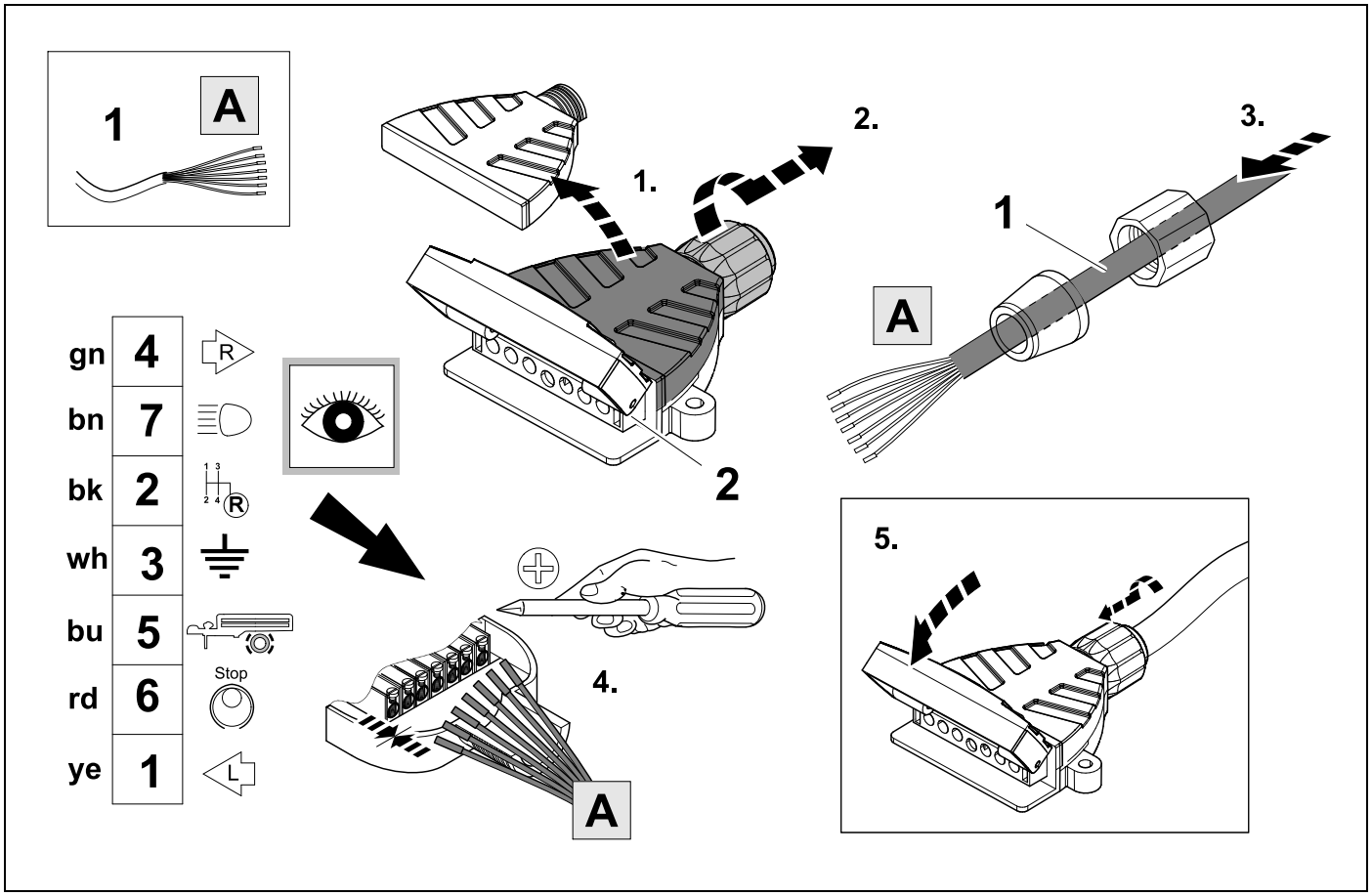

17

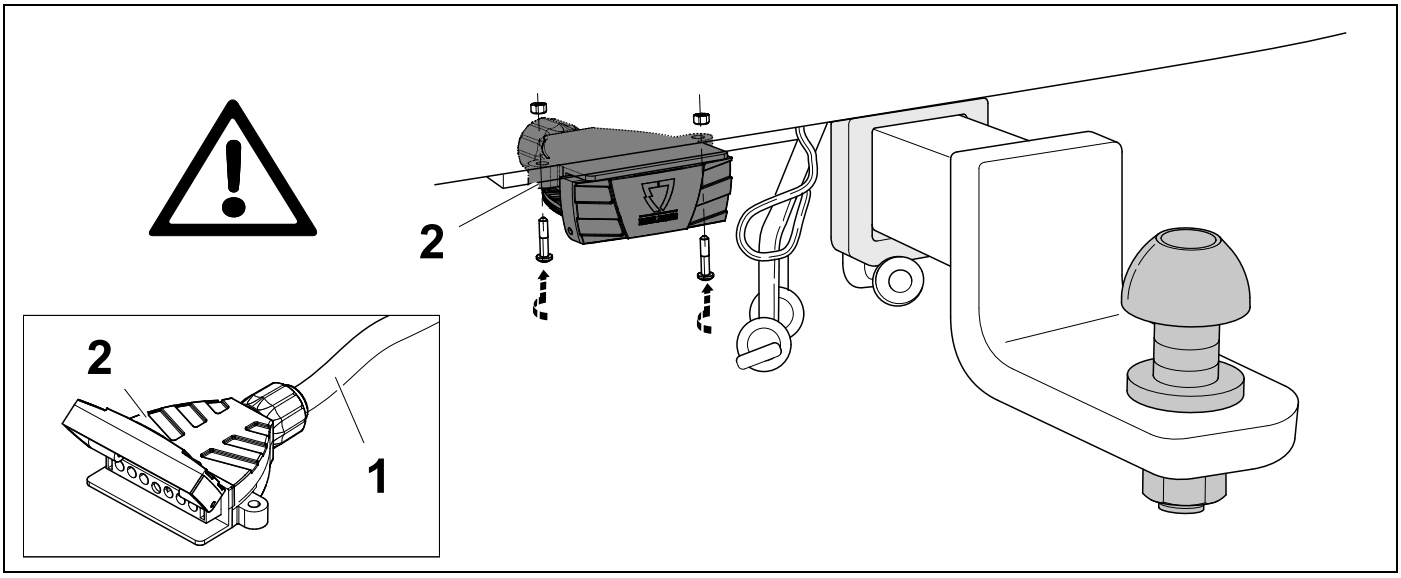

18 ⇨ **19**

1	**ye**	
2	**bk**	
3	**wh**	
4	**gn**	
5	**bu**	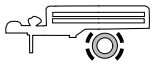
6	**rd**	
7	**bn**	

19	**bk**	**wh**	**gy**	**gn**	**rd**	**bu**	**ye**	**bn**	**pu**	**or**	**no**
GB	black	white	grey	green	red	blue	yellow	brown	purple	orange	not occupied

20 OPTIONAL ⇨ 19

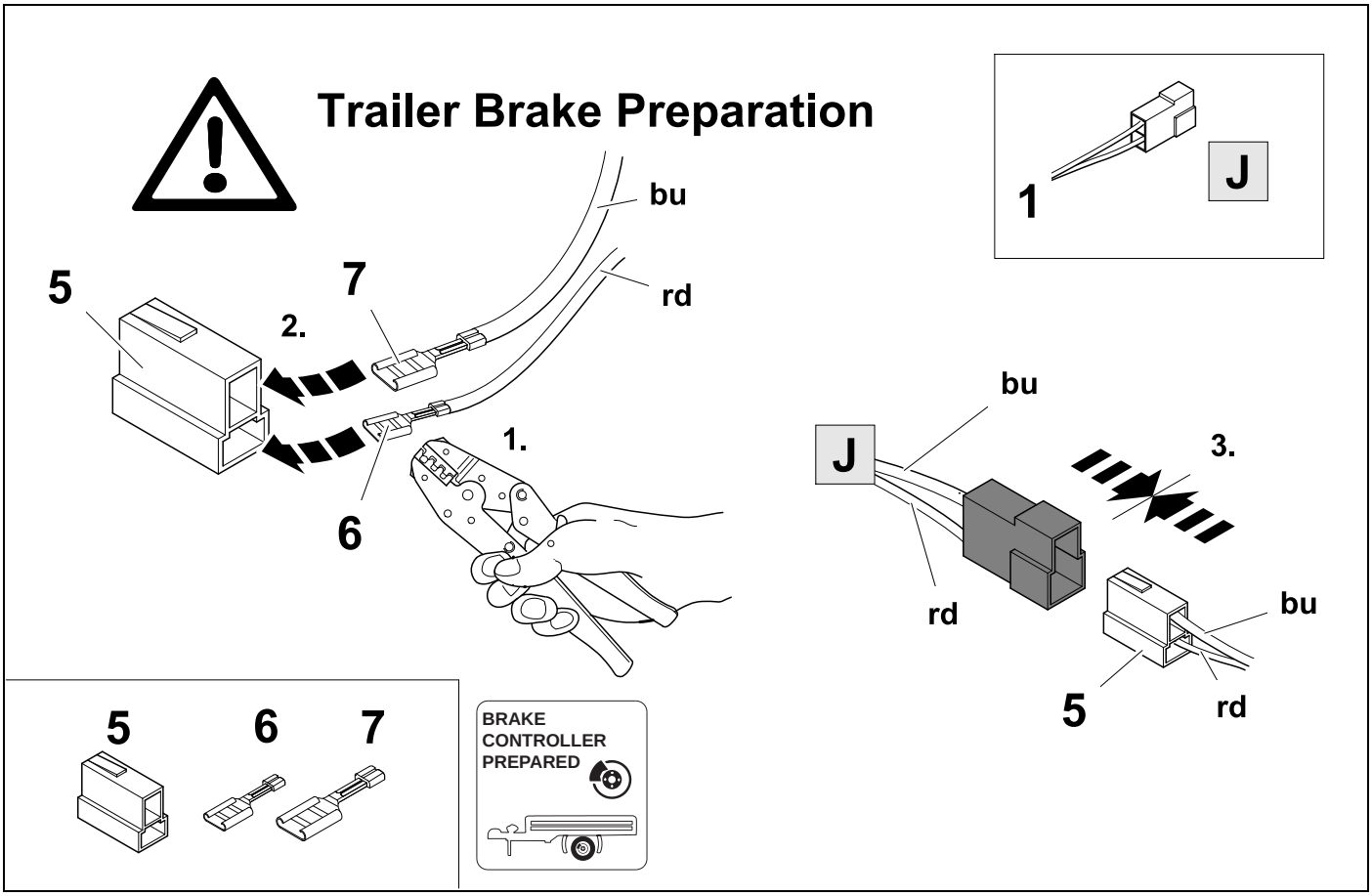

21

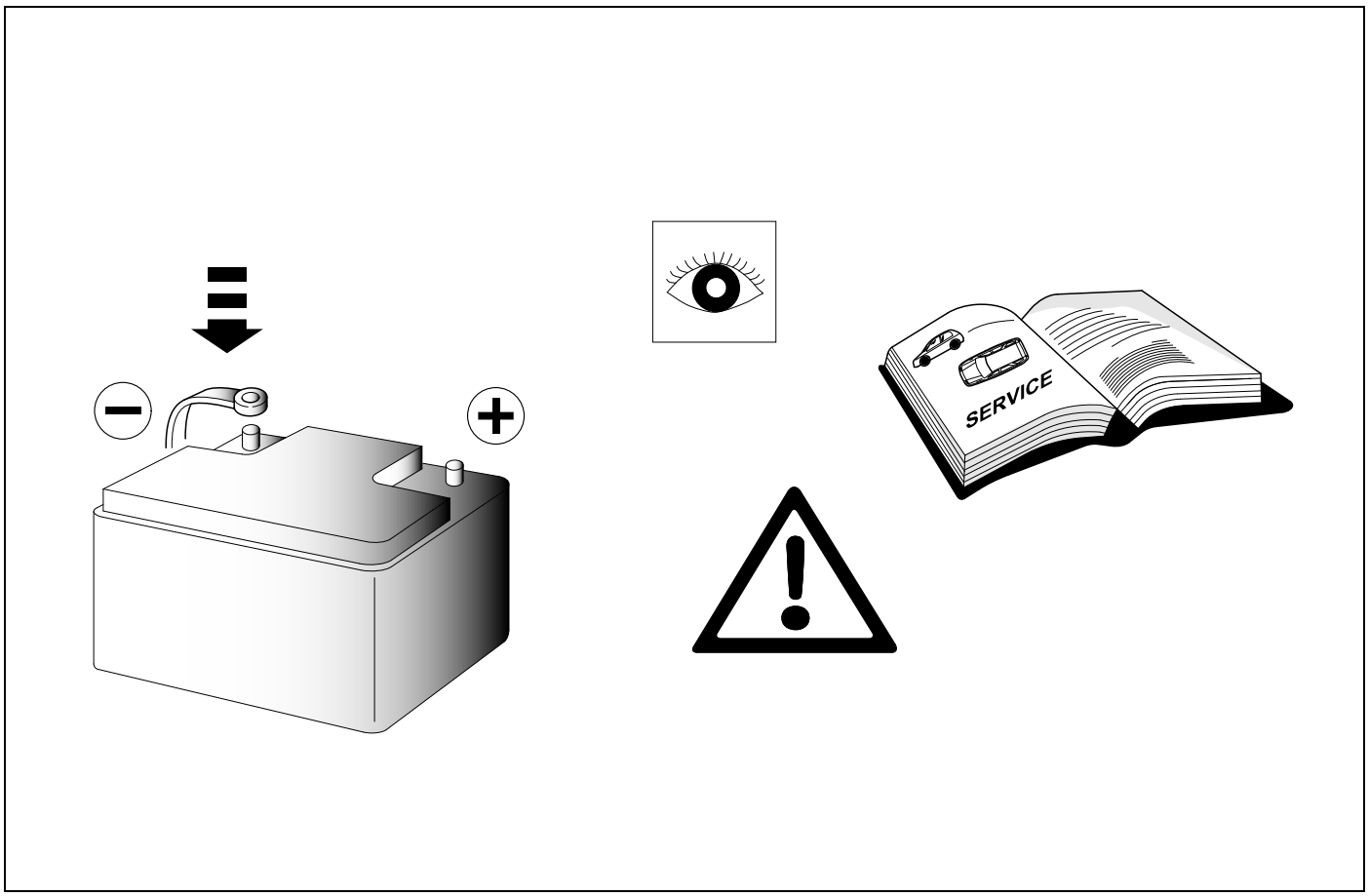

22 CHECK ALL LIGHTING FUNCTIONS

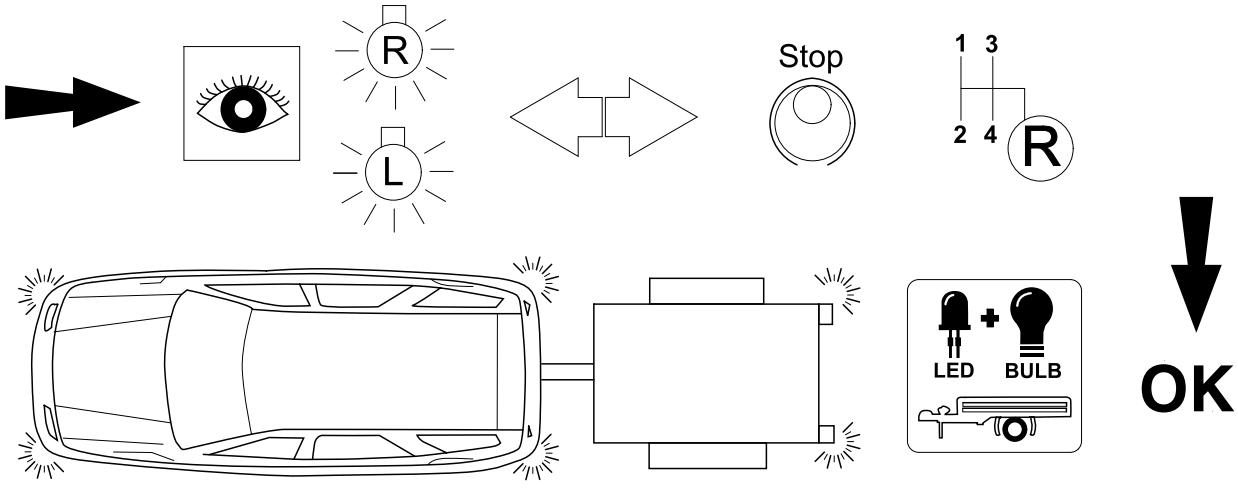

23 CHECK BULB OUT DETECTION

BULB OUT CONDITION INDICATED WITH
INCREASED INDICATOR FREQUENCY

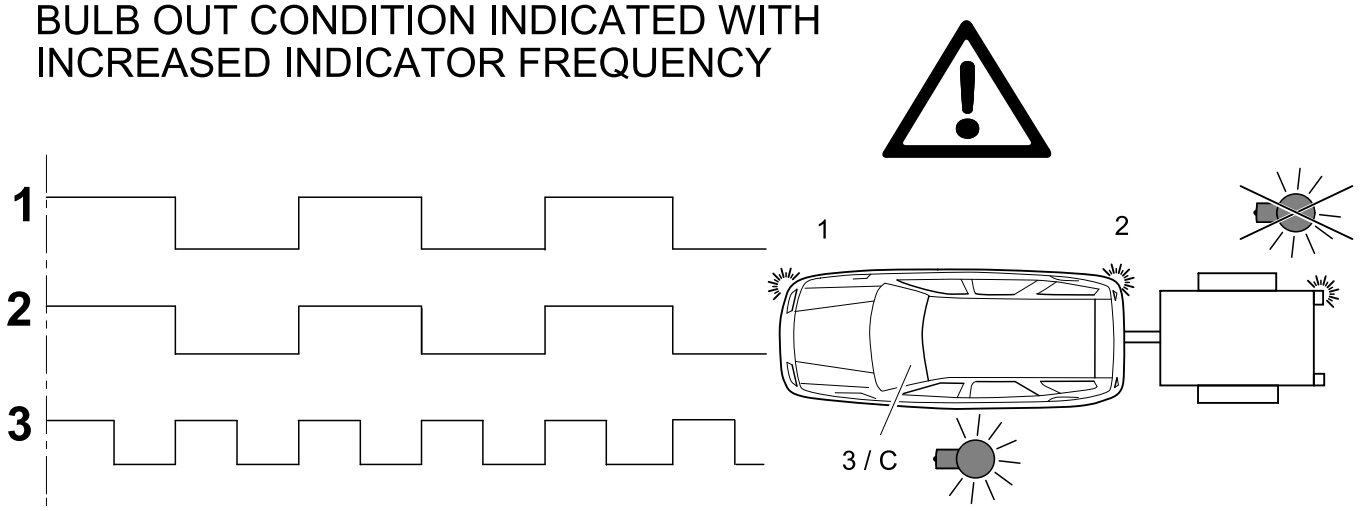

24 ⇨ **9**

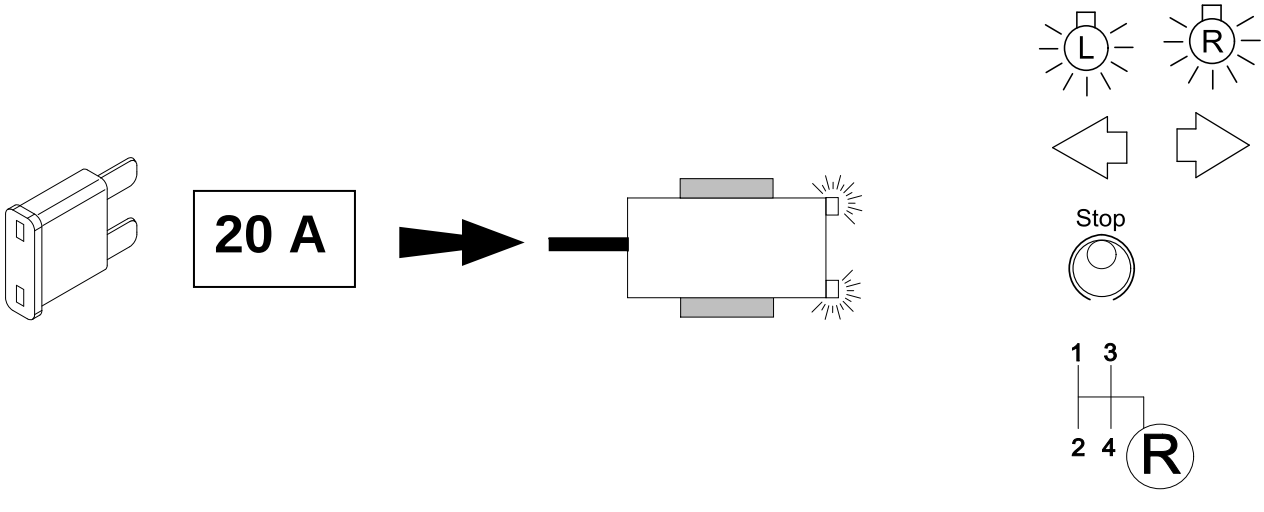

25

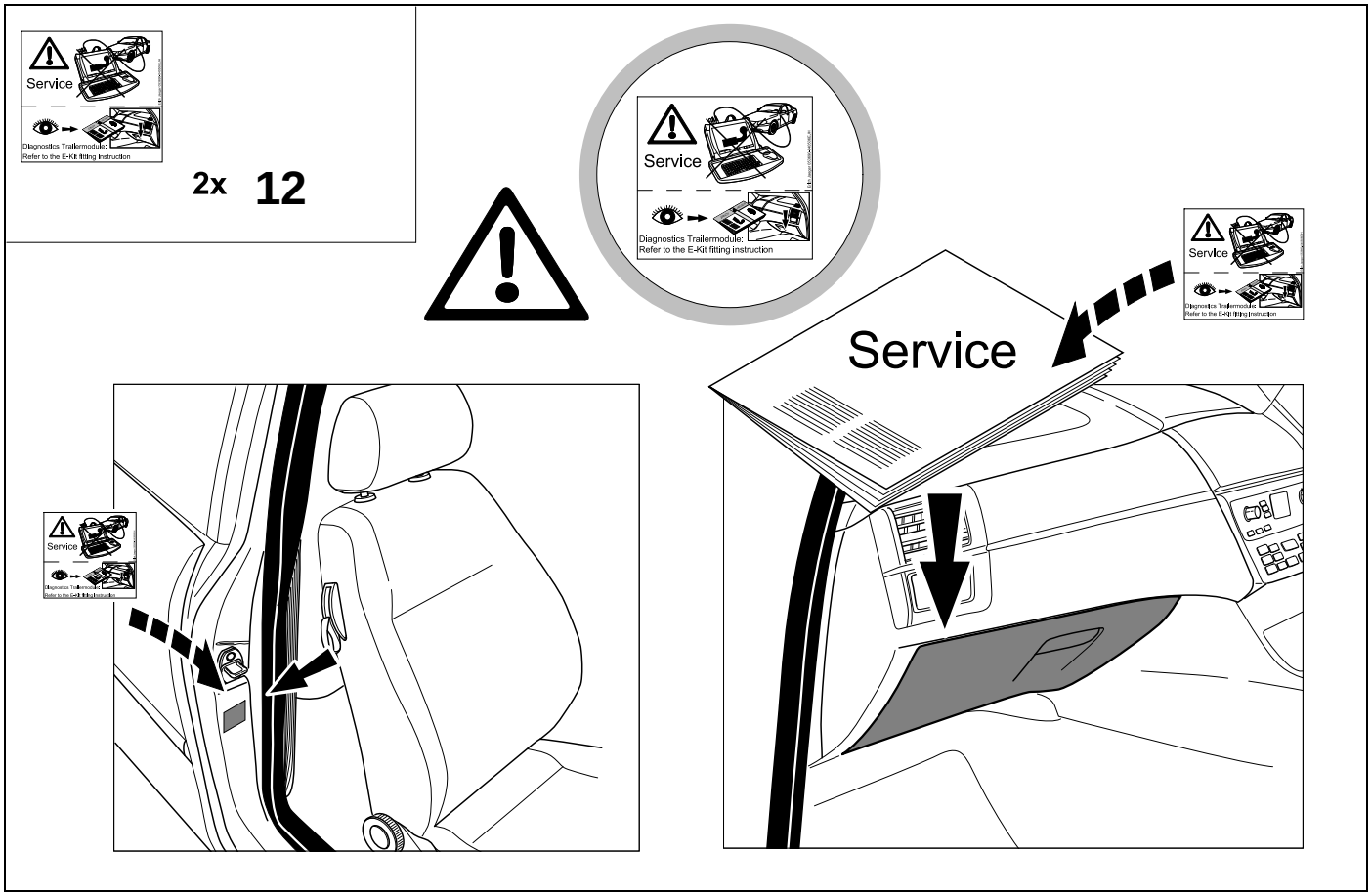
Service
Diagnostics Trailermodule:
Refer to the E-Kit fitting instruction
2x 12
Service
Diagnostics Trailermodule:
Refer to the E-Kit fitting instruction
Service
Service

If the PDC does not automatically deactivate,
coding and initialization of the module might be required.

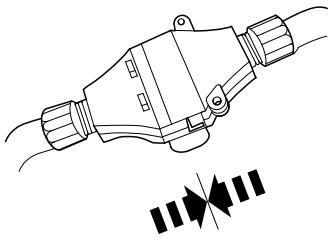

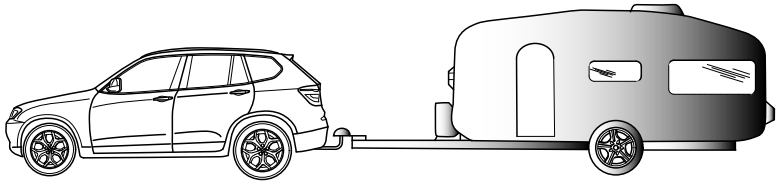

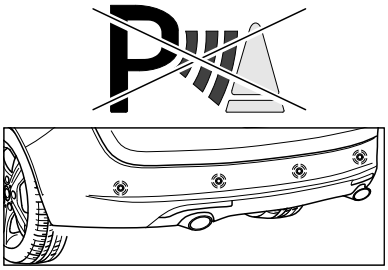

No Coding

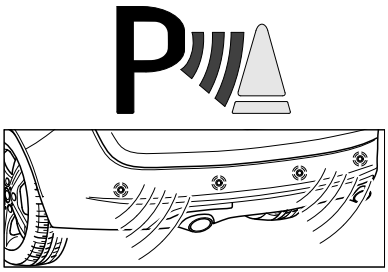

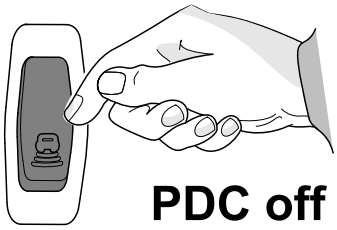

PDC off

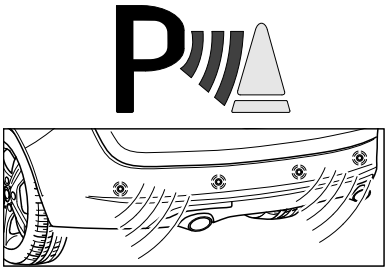

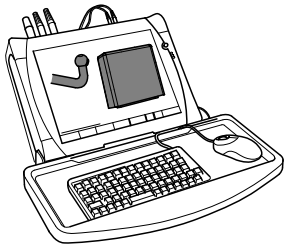

BMW Service ISTA/P
Initialize Trailer Module

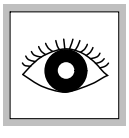

27

27 CODING

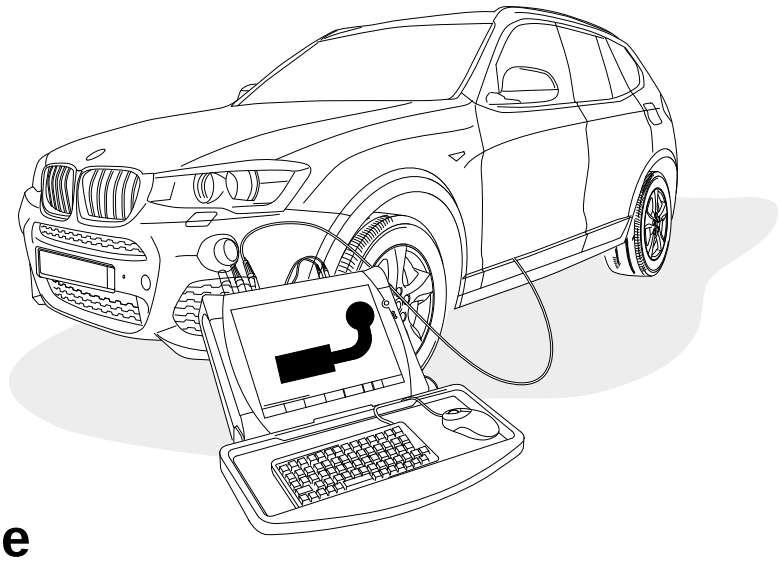

BMW Service ISTA/P
Initialize Trailer Module

GB

Please effect coding as follows:

- Connect computer to vehicle
- Start ISTA/P
- Click “Modification / Upgrades”
- Scan Action plan
- Click „Coding (Ethernet)“
- Scan Action program follow-up
- Final report checking

After the effected connection, the rear park assist system will also automatically be deactivated in trailer operation!

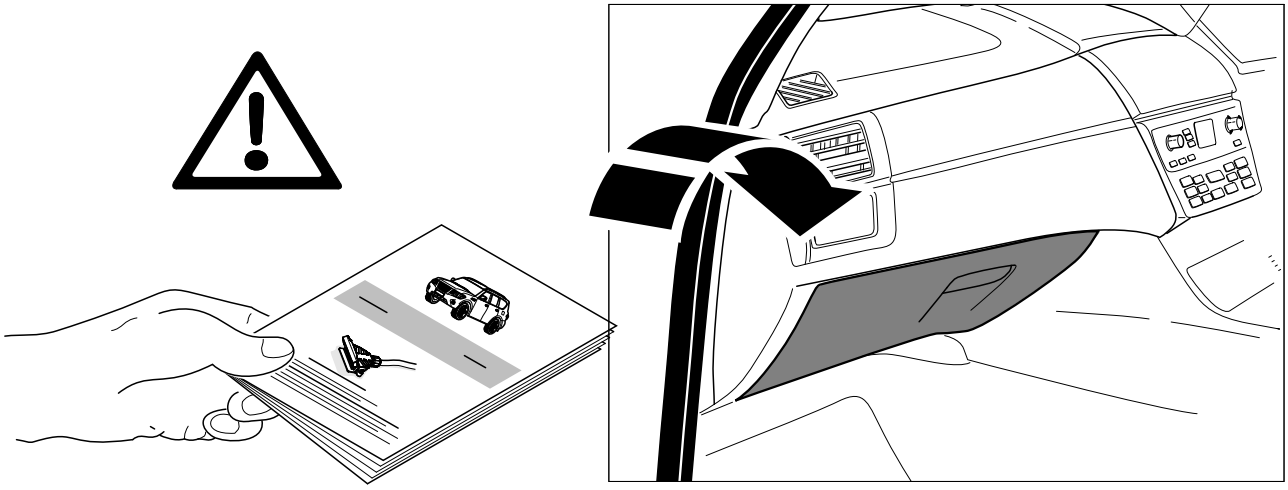

GB

Subject to change in terms of construction, equipment and colour, and may contain errors.
The information and illustrations are non-binding.